Critical Environment Technologies™

Operation Manual

REMEMBER

DISABLE RELAYS BEFORE CONNECTING CDA TO SCC

POWER CYCLE LPT & SCC AFTER DISCONNECTING CDA (v1.5)

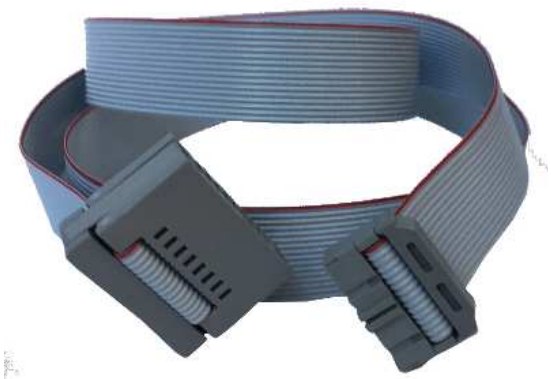

Rev. A | 2017.10

CDA Calibration Display Adapter for LPT and SCC

www.critical-environment.com

TABLE OF CONTENTS

WARNINGS 4

1 POLICIES 4
- 1.1 Important Note 4
- 1.2 Warranty Policy 5
- 1.3 Service Policy 5
- 1.4 Copyrights 6
- 1.5 Disclaimer 7
- 1.6 Revisions 7

2 INTRODUCTION 8
- 2.1 General Description 8
- 2.2 Key Features 9
- 2.3 General Safety Warnings 9

3 INSTRUMENT SPECIFICATIONS 9
- 3.1 Technical Specifications 9
- 3.2 Dimensions 11
- 3.3 Exterior Enclosure 12

4 OPERATION 13
- 4.1 Power Requirements 13
- 4.2 CDA Operation with an LPT or SCC 14
- WARNINGS 14
- 4.3 How to Connect the CDA to an LPT or SCC 14
  - 4.3.1 Reasons Why the CDA May Fail to Detect Device 16
- 4.4 How to Disconnect the CDA from an LPT or SCC 16
- WARNING 16

© 2017 All rights reserved. Data subject to change without notice.

4.5 How to Connect the CDA to the Next LPT or SCC 16

5 CALIBRATION 16

5.1 Calibration Specifications 16

5.1.1 Gas 16

5.1.2 Regulators & Flow 17

5.1.3 Adapters 17

5.1.4 Calibration Frequency 17

5.1.5 Gas Testing Frequency (Bump Testing) 17

5.2 Calibration Procedure for the LPT or SCC 18

5.2.1 Zero Calibration Only 19

5.2.2 Span Calibration Only 20

5.2.3 Full Calibration (Zero then Span) 22

5.2.4 Troubleshooting Calibration 22

6 ADDITIONAL SETTINGS FOR THE SCC 23

6.1 Setting ON/OF Relay Delays (SCC only) 23

6.2 Setting Alarm Levels (SCC only) 24

7 TROUBLE SHOOTING 25

© 2017 All rights reserved. Data subject to change without notice.

WARNING: It is advisable that you temporarily disable the relays prior to connecting the CDA to an SCC. Otherwise, upon connecting the CDA to an SCC, the relays will be tripped as the SCC power cycles.

NOTE: Upon connecting the CDA to an LPT, the analog output will spike up to 5.4 mA as the LPT power cycles, afterwhich it will settle back to 4 mA.

CAUTION: While attached to CDA, the LPT and the SCC are offline and in communicaton mode; meaning they will NOT be actively monitoring gas levels. Therefore, neither device will go into alarm in the event of a hazardous gas reading.

WARNING: After disconnecting the CDA from the LPT or SCC, you MUST disconnect and reconnect the power to the LPT and SCC. If you do not do this the analog output of the LPT will not work and the SCC will not go into alarm if the unit were to reach a high gas reading. MEANING: both devices will not function as gas detectors until they are power cycled. (applies to v1.5)

1 POLICIES

1.1 Important Note

Read and understand this manual prior to using this instrument. Carefully read the warranty policy, service policy, notices, disclaimers and revisions on the following pages.

This instrument has not been designed to be intrinsically safe. For your safety, **do not** use it in classified hazardous areas (explosion-rated environments).

This instrument should not be dropped.

© 2017 All rights reserved. Data subject to change without notice.

1.2 Warranty Policy

Critical Environment Technologies Canada Inc. (CETCI), referred to as the manufacturer, warrants this instrument, (excluding battery) to be free from defects in materials and workmanship for a period of **two years from the date of purchase from our facility.** If the product should become defective within this warranty period, we will repair or replace it at our discretion.

The warranty status may be affected if the instrument has not been used and maintained per the instructions in this manual or has been abused, damaged, or modified in any way. This instrument is only to be used for purposes stated herein. The manufacturer is not liable for auxiliary interfaced equipment or consequential damage. Warranty does not include third party trouble-shooting costs or freight to / from the manufacturer's facility. CETCI's liability is limited to replacement or repair of the equipment manufactured.

Due to ongoing research, development, and product testing, the manufacturer reserves the right to change specifications without notice. The information contained herein is based on data considered accurate. However, no warranty is expressed or implied regarding the accuracy of this data.

All goods must be shipped to the manufacturer by prepaid freight. All returned goods must be pre-authorized by obtaining a Returned Merchandise Authorization (RMA) number. Contact the manufacturer for a number and procedures required for product transport.

1.3 Service Policy

CETCI maintains an instrument service facility at the factory. Some CETCI distributors / agents may also have repair facilities; however, CETCI assumes no liability for service performed by anyone other than CETCI personnel.

Repairs are warranted for 90 days after date of shipment (sensors have individual warranties).

© 2017 All rights reserved. Data subject to change without notice.

Should your instrument require non-warranty repair, you may contact the distributor from whom it was purchased or you may contact CETCI directly.

Prior to shipping equipment to CETCI, contact our office for an RMA #. All returned goods must be accompanied with an RMA number.

If CETCI is to do the repair work, you may send the instrument, prepaid, to:

Attention: Service Department
Critical Environment Technologies Canada Inc.
Unit 145, 7391 Vantage Way
Delta, BC, V4G 1M3

Always include your Returned Merchandise Authorization (RMA) number, address, telephone number, contact name, shipping / billing information, and a description of the defect as you perceive it. You will be contacted with a cost estimate for expected repairs, prior to the performance of any service work.

For liability reasons, CETCI has a policy of performing all needed repairs to restore the instrument to full operating condition.

Pack the equipment well (in its original packing if possible), as we cannot be held responsible for any damage incurred during shipping to our facility.

1.4 Copyrights

This manual is subject to copyright protection; all rights are reserved. Under international and domestic copyright laws, this manual may not be copied or translated, in whole or in part, in any manner or format, without the written permission of CETCI.

© 2017 All rights reserved. Data subject to change without notice.

1.5 Disclaimer

Under no circumstances will CETCI be liable for any claims, losses or damages resulting from or arising out of the repair or modification of this equipment by a party other than CETCI service technicians, or by operation or use of the equipment other than in accordance with the printed instructions contained within this manual or if the equipment has been improperly maintained or subjected to neglect or accident. Any of the forgoing will void the warranty.

Under most local electrical codes, low voltage wires cannot be run within the same conduit as line voltage wires. It is CETCI policy that all wiring of our products meet this requirement.

It is CETCI policy that all wiring be within properly grounded (earth or safety) conduit.

1.6 Revisions

This manual was written and published by CETCI. The manufacturer makes no warranty or representation, expressed or implied including any warranty of merchantability or fitness for purpose, with respect to this manual.

All information contained in this manual is believed to be true and accurate at the time of printing. However, as part of its continuing efforts to improve its products and their documentation, the manufacturer reserves the right to make changes at any time without notice. Revised copies of this manual can be obtained by contacting CETCI or visiting www.critical-environment.com.

Should you detect any error or omission in this manual, please contact CETCI at the following address:

Critical Environment Technologies Canada Inc.
Unit 145, 7391 Vantage Way, Delta, BC, V4G 1M3, Canada
Toll Free: +1.877.940.8741

© 2017 All rights reserved. Data subject to change without notice.

Telephone: +1.604.940.8741
Fax: +1.604.940.8745
Email: marketing@cetci.com
Website: www.critical-environment.com

In no event will CETCI, its officers or employees be liable for any direct, special, incidental or consequential damages resulting from any defect in any manual, even if advised of the possibility of such damages.

2 INTRODUCTION

2.1 General Description

Thank you for purchasing the CDA Calibration Display Adapter. The CDA is a handheld, battery operated calibration display adapter for use with the LPT and the SCC. It provides a multi-line display that guides the user during the calibration procedure instead of having to use the built in method of reading the LED blink patterns to determine the calibration steps.

The CDA comes with a long ribbon cable that plugs into the card edge of the circuit board to estabish a connection. The menu is easy to navigate with Up, Down and Enter push buttons.

The slim design makes the CDA easy to hold and it can be laid flat or stand on its side to facilitate the use of both hands for attaching and flowing gas.

When connected to the SCC, the CDA can be used to set the ON/OFF relay delays and alarm levels for the SCC.

© 2017 All rights reserved. Data subject to change without notice.

2.2 Key Features

- Slim design makes it easy to hold
- Plugs into the LPT and the SCC and becomes the display, replacing the need to watch the LED blink patterns during calibration
- Easy to follow menu for calibration procedures (zero, span, full calibration)
- Able to set ON/OFF relay delays and alarm levels for the SCC

If after reading through the manual, you have any questions, please do not hesitate to contact our service department for technical support.

2.3 General Safety Warnings

The CDA is intended for indoor use. It should be protected from extreme weather conditions and water ingress. There are no serviceable elements. There are no replaceable components except the battery.

3 INSTRUMENT SPECIFICATIONS

3.1 Technical Specifications

MECHANICAL	
Enclosure	Molded flame retardant ABS plastic, UL94-5VA
ON/OFF	Hard power switch
Weight	195 g / 0.4 lb
Size	14 cm x 8.25 cm x 2.61 cm / 5.5 in x 3.25 in x 1.03 in

© 2017 All rights reserved. Data subject to change without notice.

Ribbon Cable (supplied)	91 cm / 36 in / 3 ft

ELECTRICAL

Power Source	Standard 9V battery
Battery Life	approximately 12 hours of continuous use
Warm-up Time	<30 seconds

USER INTERFACE

Display	2x16 character LCD digital display
Push Buttons	UP, DOWN, ENTER push button type switches

ENVIRONMENTAL

Operating Temperature	-20°C to 50°C (-4°F to 122°F)

© 2017 All rights reserved. Data subject to change without notice.

3.2 Dimensions

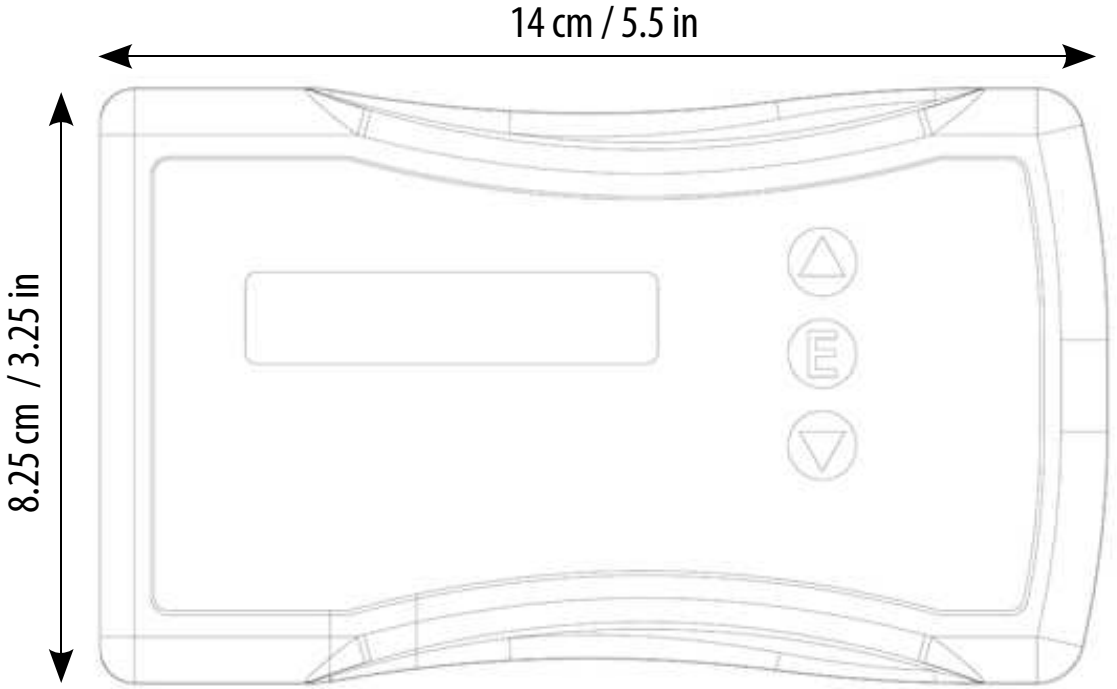

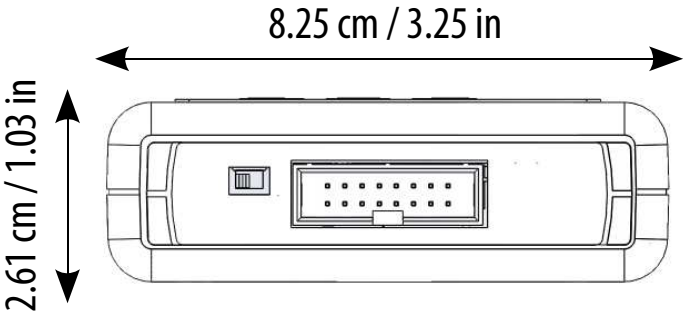

Supplied ribbon cable length 91 cm / 36 in

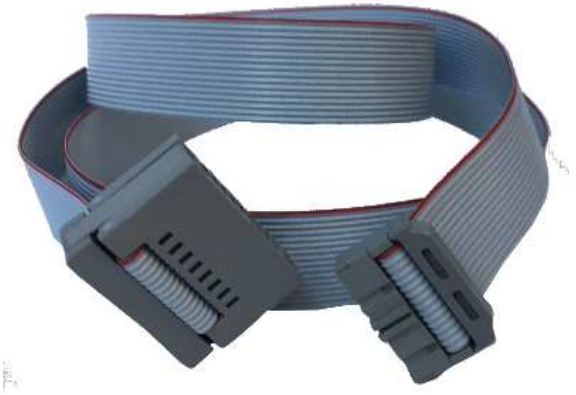

© 2017 All rights reserved. Data subject to change without notice.

3.3 Exterior Enclosure

NUMBER	FEATURE	FUNCTION
❶	ON/OFF Switch	Turns CDA on or off
❷	LCD Display	2 lines by 16 characters
❸	Cable Connector Socket	Where the cable plug end of the ribbon cable attaches to the CDA

© 2017 All rights reserved. Data subject to change without notice.

❹	Navigation Buttons - Up or Down	Use to scroll through the menu
❺	Navigation Button - E for Enter	Use to select a menu choice
❻	Battery Compartment	Slide outwards in order to change the 9V battery

4 OPERATION

NOTE: For full system operation details of how the LPT or SCC work and can be configured, please refer to their respective Operation Manuals.

4.1 Power Requirements

The CDA is powered by a standard 9V battery. It is easily installed by removing the back cover and attaching the two snap connectors to the battery. Each CDA comes with one battery installed.

The battery will need to be replaced after approximately 12 hours of continuous operation.

When the battery is getting low, the CDA will show the following warning screen:

If you press E, the CDA will continue as normal until the battery dies and the display goes blank.

If you turn on the CDA and the screen flashes once and remains blank, the battery is dead and needs to be replaced.

NOTE: If you happen to turn the CDA off and back on again after seeing the low battery warning,

© 2017 All rights reserved. Data subject to change without notice.

the warning will reappear and operate as mentioned above.

4.2 CDA Operation with an LPT or SCC

WARNING: It is advisable that you temporarily disable the relays prior to connecting the CDA to an SCC. Otherwise, upon connecting the CDA to an SCC, the relays will be tripped as the SCC power cycles.

NOTE: Upon connecting the CDA to an LPT, the analog output will spike up to 5.4 mA as the LPT power cycles, afterwhich it will settle back to 4 mA.

CAUTION: While attached to the CDA, the LPT and the SCC are offline, in communicaton mode; meaning they will NOT be actively monitoring gas levels. Therefore, neither device will go into alarm in the event of a hazardous gas reading.

WARNING: After disconnecting the CDA from the LPT or SCC, you MUST disconnect and reconnect the power to the LPT and SCC. If you do not do this the analog output of the LPT will not work and the SCC will not go into alarm if the unit were to reach a high gas reading. MEANING: both devices will not function as gas detectors until they are power cycled. (applies to v1.5)

Under no circumstances is CETCI held liable for any claims, losses or damages resulting from failing to disconnect and power cycle the LPT or SCC after disconnecting the CDA .

4.3 How to Connect the CDA to an LPT or SCC

Open the LPT or SCC enclosure and attach the ribbon cable card edge connector to the card edge of the circuit board. The cable connector should easily connect to the circuit board connector. If you are forcing it, you may be trying to connect it backwards. Plug the other end of the ribbon cable

© 2017 All rights reserved. Data subject to change without notice.

into the CDA enclosure and turn the CDA on using the ON/OFF switch located on the end of the device. Refer to Section *3.3 Exterior Enclosure* for location of ON/OFF switch.

The CDA will breifly show the splash screen followed by Connect Device Press Enter screen.

Press E. The CDA will indicate it is connecting, will briefly show the serial number of the LPT or SCC and then come to rest at the Main screen.

If the CDA does not establish a connection or read the serial number of the LPT or SCC, the No Device Detect screen appears.

If Retry doesn't work choose Manual and choose the type of device (SCC or LPT) you are trying to connect to.

© 2017 All rights reserved. Data subject to change without notice.

4.3.1 Reasons Why the CDA May Fail to Detect Device

- The cable is not connected properly to the CDA or the SCC or LPT.
- The SCC or LPT is not powered on.
- The wrong type of device was chosen after selecting Manual on the No Device Detected screen.

4.4 How to Disconnect the CDA from LPT or SCC

WARNING: After you remove the cable connector of the CDA from the circuit board of the LPT or SCC, you MUST disconnect and reconnect the power to the LPT or SCC. If you do not do this the analog output of the LPT will not work and the relays of the SCC will not function. (applies to v1.5)

4.5 How to Connect the CDA to the Next LPT or SCC

When finished with the current LPT or SCC, turn off the CDA, remove the cable card edge connector from the card edge of the circuit board and plug it into the card edge of the next SCC or LPT and turn the CDA back on. The CDA is connected and ready to be used when the Main screen is displayed. If you have trouble establishing a connection, refer to Section *4.3 How to Connect the CDA to an LPT or SCC*.

5 CALIBRATION

5.1 Calibration Specifications

5.1.1 Gas

Calibration span gases should have at least ± 5% accuracy and have a current date stamp. Gas generators should have a current dated cell installed. Service personnel should flow zero emissions air or 20.9% volume O_2 (scrubbed of hydrocarbons) before attempting to null adjust toxic gas sensors. In some cases N_2 can be substituted for zero air. Contact CETCI for clarification.

© 2017 All rights reserved. Data subject to change without notice.

Every LPT transmitter and SCC Self Contained Controller is calibrated in a chamber by true diffusion method prior to leaving our facility. This method more closely emulates actual "real world" conditions. Field calibration using gas cylinder, regulator and hose directing span gas into the sensor may result in slightly higher readings. It is important to note that the type of gas mixture, how old the gas is and what temperature it has been stored at will also affect repeatability during field calibration.

5.1.2 Regulators & Flow

Calibration gases that are lighter than or the same weight as air (CO, O_2, etc.) should be flowed at 0.5 LPM. Gases heavier than air (NO_2, etc.) should be flowed between 0.5 and 1.0 LPM. Fixed flow regulators provide more accuracy.

5.1.3 Adapters

The proper calibration adapter should be utilized to allow the gas to properly diffuse around the sensor. They are available from CETCI under part number **CET-7000-CAP**.

5.1.4 Calibration Frequency

- Parking garage detectors: Once every 12 months
- OHS applications: Once every 6 months (OHS: Occupational Health & Safety)

5.1.5 Gas Testing Frequency (Bump Testing)

For the purpose of safety in OHS applications, sensors should be gas tested (bump tested) once every month to confirm response and alarm activation.

NOTE: A calibration label should be applied after every calibration to confirm work performed and the date it was confirmed. If a controller is involved, the alarm set points should be indicated on a label on the front door of the enclosure so anyone working in the environment can be aware.
Required Equipment: Calibration Kit, Calibration gases, CDA and connector cable
Optional: Digital multi-meter

© 2017 All rights reserved. Data subject to change without notice.

Users can order the calibration kit, calibration accessories and / or gases from any CETCI authorized distributor or they can supply their own gas and equipment as long as the gas meets the minimum specifications.

NOTE: If an inappropriate concentration of span gas is applied during calibration, calibration may succeed but it does not mean the equipment has been calibrated properly. CETCI is not responsible for improperly calibrated transmitters. Follow the manual instructions carefully.

5.2 Calibration Procedure for the LPT or SCC

Using the CDA eliminates the need to move jumpers and/or watch the LED sequence flashes during zero and span calibration.

NOTE: There is only one small difference between the calibration process of the LPT and the SCC.

- When doing the span calibration of an LPT, you will have to select one of three existing values for the span calibration gas concentration.
- When doing the span calibration of an SCC, you can enter the desired calibration gas concentration.

With the CDA displaying the Main screen, Press E to enter the calibration menu for gas displayed on the Main screen (for example, Calibrate CO).

NOTE: If you want to calibrate the second channel gas type of an SCC first, press the DOWN arrow and choose Calibrate NO2 (for example). Continue to follow the same steps for that gas type.

NOTE: Both gas type screens will display the cal gas concentration required to be used during span and full calibration. Do not use a different cal gas concentration as this will cause inaccurate gas readings and could pose a serious health and safety issue.

© 2017 All rights reserved. Data subject to change without notice.

The zero and the span calibration can be done separately, or both can be done one after the other in a full calibration, refer to Section *5.2.3 Full Calibration (Zero then Span)*. Use the UP arrow to toggle between the options.

5.2.1 Zero Calibration Only

If you prefer to calibrate the zero and the span separately, start with the Zero Calibration procedure.

If all that is desired is a zero calibration shift, don't do the span calibration after a successful zero calibration. A zero shift calibration is only done when the LPT or SCC is being installed for the first time so as to compensate for the new environment in which the device is being installed.

Attach the cylinder of zero air to the LPT or SCC. From the Main screen, press E and then press E again to choose Zero.

You should start flowing the zero air before you start the zero calibration. Open the regulator valve fully allowing the zero air to flow over the sensor. As soon as you press E for Zero, the CDA will collect readings for 10 seconds.

When finished, the CDA will countdown from 300 seconds (5 min), afterwhich it will return to the main menu. You can exit this screen at any time by pressing E.

© 2017 All rights reserved. Data subject to change without notice.

5.2.2 Span Calibration Only

We recommend you always do a zero calibration before doing the span calibration.

From the Main screen, Press E, use the UP Arrow to choose Span and press E to select. The display will show the cal gas concentration that the device is currently set at.

If you want to change the cal gas concentration:

- For the LPT, use the UP or DOWN arrow to scroll through 3 choices of cal gas concentrations and choose the one you want by pressing E.
- For the SCC, enter the cal gas concentration level you want by using the UP or DOWN arrows.

Make sure the setting matches the concentration of the cylinder of gas you are using.

Attach the correct cylinder of cal gas to the LPT or SCC and press E. You must start flowing the cal gas before the end of the 60 second countdown. Open the regulator valve fully allowing the cal gas to flow over the sensor. During this time you cannot exit the screen.

A timer will count down as the system begins the settling process which establishes a consistent flow of gas that matches the concentration of gas at the sensor as what is in the bottle.

© 2017 All rights reserved. Data subject to change without notice.

Once the gas has settled and is at an acceptable concentration, the spanning process will begin with a countdown from 10 seconds.

Once the settling timer has run out the screen will indicate that it is spanning. It will countdown from 10 seconds.

When finished, the CDA will countdown from 300 seconds (5 min), afterwhich it will return to the main menu. You can exit this screen at any time by pressing E.

If the zero and span calibrations were successful, the CDA will return to the Main screen.

5.2.3 Full Calibration (Zero then Span)

NOTE: This is the same procedure as Section *5.2.1. Zero Calibration* and Section *5.2.2. Span Calibration* steps outlined in the previous pages. The only difference is the Full Calibration method eliminates the ability to individually choose Zero Calibration or Span Calibration individually.

When the Full Calbration procedure is started and if the zero calibration was successful, the words 'Zero OK' will flash very breifly on the display and then the CDA will continue into the span calibration procedure by displaying 'Flow Gas'. The time between flow zero gas and flow span gas

© 2017 All rights reserved. Data subject to change without notice.

is very quick. Make sure your cylinders are ready. Continue to follow the prompts and refer to the previous Section 5.2.1 and 5.2.2. for screen images and assistance.

5.2.4 Troubleshooting Calibration

This section is intended to aid in correcting isues that may arise during the calibration procedure. If you are unable to correct a problem, or you have questions, please contact our service department at service@cetci.com or 604-940-8741(Local) or 1877-940-8741 (Toll Free).

ERROR	REASON	RESOLUTION
Cal Timeout	The sensor did not detect any span gas	Repeat span calibration, make sure the gas is flowing.
Override? 17s Y >N 0PPM	Gas level is too high but still within range	Select Y to override and continue. Select N will show the Zero or Span failed screen. If selection is not made within a few moments, it returns to the Cal Timeout screen.
Span Fail 353s Press E to Exit	The sensitivity of the sensor is too low	Check hose connections. Check for adequate level of gas in the cylinder. Replace sensor.
Zero Fail 341s Press E to Exit	Target gas is present, or Sensor needs replacing	Clear area of target gas and try again. Replace sensor.

© 2017 All rights reserved. Data subject to change without notice.

6 ADDITIONAL SETTINGS FOR THE SCC

6.1 Setting ON/OFF Relay Delays (SCC only)

The SCC comes with configurable ON and OFF delays for each relay. The maximum amount of time that can be set is 20 minutes (1,200 seconds) for each delays on each relay.

To set a relay delay, from the Main screen, press the DOWN arrow until Set Relay Delays appears. Press E to select.

Choose the relay (1 or 2) for which you are setting the delay.

Choose ON or OFF as per the type of delay you intend to set. (In this example we are setting an ON Delay).

Use the UP or DOWN arrows to enter the number of seconds you want the ON delay to occur for. The value will increase or decrease in 10s increments. The maximum number of seconds is 1200 seconds (20 minutes).

Press E to save and exit. Repeat the same steps for the OFF Delay and other channel's relay delay settings.

© 2017 All rights reserved. Data subject to change without notice.

6.2 Setting Alarm Levels (SCC only)

The SCC is configurable as a single or dual channel detector/controller and has two gas alarm set points for each channel. Almost all installations of the SCC will use the factory default alarm set points.

Default set points are as follows:

SENSOR / GAS	MEASURMENT RANGE	LOW ALARM (ALARM 1)	HIGH ALARM (ALARM 2)	
CO	0 - 200 ppm	25 ppm	100 ppm	default
NO_2	0 - 10 ppm	0.7 ppm	1.5 ppm	default
C_3H_8	0 - 100% LEL	10% LEL	20% LEL	default

NOTE: Alarm values for CH_4 and H_2 are the same as for C_3H_8.

To change an alarm set point, from the Main screen, press the DOWN arrow until Set Alarm Levels appears. Press E to select.

Choose the channel (1 or 2) for which you are setting the alarm set point.

Choose the alarm (1 or 2). Factory default setting is Alarm 1 = Low alarm and Alarm 2 = High Alarm.

© 2017 All rights reserved. Data subject to change without notice.

Use the UP or DOWN arrows to change the gas concentration.

Press E to save and exit. Repeat process fo the other alarms and channel.

NOTE: Alarm 1 is "low alarm" and Alarm 2 is "high alarm" by default. The set points can be changed so that Alarm 1 is higher than Alarm 2. However, LED and relay behaviour will not change, i.e. once alarm point 2 is reached, Relay 2 will trip and the channel LED will show red, regardless of whether alarm point 1 has been reached.

7 TROUBLE SHOOTING

CDA won't power up.

Turn the unit ON. If it doesn't power up, install a new battery.

CDA display shows 'Low Battery'.

Replace the battery or press 'E' to continue operating until battery dies completely, then install a new battery.

CDA display flashes once and remains blank.

Install a new battery.

© 2017 All rights reserved. Data subject to change without notice.

CDA display shows 'No Device Dectect' when trying to connect to the LPT or SCC.
Make sure the cable connectors are connected properly. If Retry doesn't work choose Manual and then the device you are trying to connect to.

CDA display shows gibberish characters and/or missing information.
If you chose Manual, did you choose the correct device? If the CDA is connected to an LPT but you choose SCC (or vice versa), the CDA will display gibberish and act in an unknown manner.
Restart the CDA. If problem persists, check cable connection. Test by connecting to a different SCC or LPT. If problem still persists, the CDA is corrupt and may need replacing.

© 2017 All rights reserved. Data subject to change without notice.

NOTES

© 2017 All rights reserved. Data subject to change without notice.

Critical Environment Technologies Canada Inc.

Unit 145, 7391 Vantage Way, Delta, BC, V4G 1M3, Canada

Toll Free: +1.877.940.8741
Tel: +1.604.940.8741
Fax: +1.604.940.8745

www.critical-environment.com

CDA20171004-A

© 2017 Critical Environment Technologies Canada Inc. All rights reserved. Data in this publication may change without notice.